Work Order ID 58674

May 14, 2010 7:12:32 AM

Item ID: D350-591-312 **Accept** **Setup Start**

Revision ID: **Stop**

Item Name: Heli-Access-Step, Long RH

Start Date: 5/14/10 **Start Qty:** 10.00 **Cust Item ID:**

Required Date: 5/21/10 **Req'd Qty:** 10.00 **Customer:**

Reference:

Approvals: **Process Plan:** CZ **Date:** 10/5/14 **Tooling:** _____ **Date:** _____ **Run Start**

QC: _____ **Date:** _____ **SPC (Y/N):** _____ **Date:** _____ **Stop**

Sequence ID/ Work Center ID	Operation Description	Set Up/ Run Hours	Draw Number	Draw Rev.	Plan Code	Accept Qty	Reject Qty	Reject Number	Insp. Stamp
Draw Nbr	**Revision Nbr**								
D3272	Rev B								
100		0.00							
DC	DOCUMENT CONTROL								
Document Control	**Memo**	0.00							
	Photocopy bluefile and type labels as per PPP D350-591-312 CHG001								
110		0.00							
Large Fab	Large Fab								
Large Fab	**Memo**	0.00							
	1-Bevel end for welding FWD ONLY								
	2-Weld Support using Jig DT8719, weld Fwd End Plate as per QSI 004 & Dwg D3272								
	A/R Aluminum Rod M112860 M114242								
	3-Grind End Plate flush								

~~HJ for BG 10/05/08~~

8 10/06/09

10 of

10.05.25

Dart Aerospace Ltd

W/O:		WORK ORDER CHANGES					
DATE	STEP	PROCEDURE CHANGE	By	Date	Qty	Approval Chief Eng / Prod Mgr	Approval QC Inspector

Part No: _____ **PAR #:** _____ **Fault Category:** _____ **NCR:** Yes No **DQA:** _____ **Date:** _____

Resolution: _____ **Disposition:** _____ **QA: N/C Closed:** _____ **Date:** _____

NCR:		WORK ORDER NON-CONFORMANCE (NCR)						
DATE	STEP	Description of NC Section A	Corrective Action Section B			Verification Section C	Approval Chief Eng	Approval QC Inspector
			Initial Chief Eng	Action Description Chief Eng	Sign & Date			

NOTE: Date & initial all entries

Work Order ID 58674

May 14, 2010 7:12:33 AM

Item ID: D350-591-312 **Accept** **Setup Start** **Stop**

Revision ID:

Item Name: Heli-Access-Step, Long RH

Start Date: 5/14/10 **Start Qty:** 10.00 **Cust Item ID:**

Required Date: 5/21/10 **Req'd Qty:** 10.00 **Customer:**

Reference:

Run Start **Stop**

Approvals: **Process Plan:** _____ **Date:** _____ **Tooling:** _____ **Date:** _____

QC: _____ **Date:** _____ **SPC (Y/N):** _____ **Date:** _____

Sequence ID/ Work Center ID	Operation Description	Set Up/ Run Hours	Draw Number	Draw Rev.	Plan Code	Accept Qty	Reject Qty	Reject Number	Insp. Stamp
120	QC9- Inspect visual per QSI004- Fusion Welds	0.00				10	Ø	BE	10/05/25
QC	Memo	0.00							
Quality Control									
130	QC5- Inspect part completeness to step on W/O	0.00	8 10/05/25			10 RK			
QC	Memo	0.00							
Quality Control									
140	Chemical Conversion Coat per QSI005 4.1	0.00	10.05.25			10	Ø		
HandFinish	Memo	0.00							
Hand Finishing									

Dart Aerospace Ltd

W/O:		WORK ORDER CHANGES					
DATE	STEP	PROCEDURE CHANGE	By	Date	Qty	Approval Chief Eng / Prod Mgr	Approval QC Inspector

Part No: _____ PAR #: _____ Fault Category: _____ NCR: Yes No , DQA: _____ Date: _____

Resolution: _____ Disposition: _____ QA: N/C Closed: _____ Date: _____

NCR:		WORK ORDER NON-CONFORMANCE (NCR)						
DATE	STEP	Description of NC Section A	Corrective Action Section B			Verification Section C	Approval Chief Eng	Approval QC Inspector
			Initial Chief Eng	Action Description Chief Eng	Sign & Date			

NOTE: Date & initial all entries

H:\FORMS\Quality Assurance\approved QA\NCRWO RevE

Work Order ID 58674

May 14, 2010 7:12:33 AM

Item ID: D350-591-312 **Accept** **Setup Start** **Stop**

Revision ID:

Item Name: Heli-Access-Step, Long RH

Start Date: 5/14/10 **Start Qty:** 10.00 **Cust Item ID:**

Required Date: 5/21/10 **Req'd Qty:** 10.00 **Customer:**

Reference:

Run Start **Stop**

Approvals: **Process Plan:** _____ **Date:** _____ **Tooling:** _____ **Date:** _____

QC: _____ **Date:** _____ **SPC (Y/N):** _____ **Date:** _____

Sequence ID/ Work Center ID	Operation Description	Set Up/ Run Hours	Draw Number	Draw Rev.	Plan Code	Accept Qty	Reject Qty	Reject Number	Insp. Stamp
150	QC3- Inspect Part Finish	0.00							
QC	**Memo**	0.00	AS	10/05/25		10	Ø		
Quality Control									
180		0.00							
Large Fab	Large Fab								
Large Fab	**Memo**	0.00	10.05.27			10	Ø		
	1-Assemble Leg Assembly as per Dwg D3272.								
	2-Leave one rivet out until welding is complete.								
	3-Bevel Aft end for welding								
	4-Inspect for foreign object as per QSI 024								
	5-Weld Aft End Plate as per QSI 004 & Dwg D3272 A/R□□Aluminum Rod□ M112860								
	6-Grind End Plate flush								
	7-Install last rivet as per Dwg.								

Dart Aerospace Ltd

W/O:		WORK ORDER CHANGES					
DATE	STEP	PROCEDURE CHANGE	By	Date	Qty	Approval Chief Eng / Prod Mgr	Approval QC Inspector

Part No: _____ PAR #: _____ Fault Category: _____ NCR: Yes No DQA: _____ Date: _____

Resolution: _____ Disposition: _____ QA: N/C Closed: _____ Date: _____

NCR:		WORK ORDER NON-CONFORMANCE (NCR)						
DATE	STEP	Description of NC Section A	Corrective Action Section B			Verification Section C	Approval Chief Eng	Approval QC Inspector
			Initial Chief Eng	Action Description Chief Eng	Sign & Date			

NOTE: Date & initial all entries

H:\FORMS\Quality Assurance\approved QA\NCRWO RevE

Work Order ID 58674

May 14, 2010 7:12:33 AM

Item ID: D350-591-312 **Accept** **Setup Start**

Revision ID: **Stop**

Item Name: Heli-Access-Step, Long RH

Start Date: 5/14/10 **Start Qty:** 10.00 **Cust Item ID:**

Required Date: 5/21/10 **Req'd Qty:** 10.00 **Customer:**

Reference:

Run Start

Approvals: **Process Plan:** _____ **Date:** _____ **Tooling:** _____ **Date:** _____

Stop

QC: _____ **Date:** _____ **SPC (Y/N):** _____ **Date:** _____

Sequence ID/ Work Center ID	Operation Description	Set Up/ Run Hours	Draw Number	Draw Rev.	Plan Code	Accept Qty	Reject Qty	Reject Number	Insp. Stamp
190	QC9- Inspect visual per QSI004- Fusion Welds	0.00				10	Ø	BE	10/05/27
QC	**Memo**	0.00							
Quality Control									
200	QC5- Inspect part completeness to step on W/O	0.00	S 10/05/27			10 RH			
QC	**Memo**	0.00							
Quality Control									
210	Chemical Conversion Coat per QSI005 4.1	0.00	10/05/27			10 RH		C	
HandFinish	**Memo**	0.00							
Hand Finishing									

Dart Aerospace Ltd

W/O:		WORK ORDER CHANGES					
DATE	STEP	PROCEDURE CHANGE	By	Date	Qty	Approval Chief Eng / Prod Mgr	Approval QC Inspector

Part No: _____ PAR #: _____ Fault Category: _____ NCR: Yes No DQA: _____ Date: _____

Resolution: _____ Disposition: _____ QA: N/C Closed: _____ Date: _____

NCR:		WORK ORDER NON-CONFORMANCE (NCR)						
DATE	STEP	Description of NC Section A	Corrective Action Section B			Verification Section C	Approval Chief Eng	Approval QC Inspector
			Initial Chief Eng	Action Description Chief Eng	Sign & Date			

NOTE: Date & initial all entries

H:\FORMS\Quality Assurance\approved QA\NCRWO RevE

Work Order ID 58674

May 14, 2010 7:12:33 AM

Item ID: D350-591-312 **Accept** **Setup Start** **Stop**

Revision ID:

Item Name: Heli-Access-Step, Long RH

Start Date: 5/14/10 **Start Qty:** 10.00 **Cust Item ID:**

Required Date: 5/21/10 **Req'd Qty:** 10.00 **Customer:**

Reference:

Run Start **Stop**

Approvals: **Process Plan:** _____ **Date:** _____ **Tooling:** _____ **Date:** _____

QC: _____ **Date:** _____ **SPC (Y/N):** _____ **Date:** _____

Sequence ID/ Work Center ID	Operation Description	Set Up/ Run Hours	Draw Number	Draw Rev.	Plan Code	Accept Qty	Reject Qty	Reject Number	Insp. Stamp
220	White Gloss(Ref:4.3.5.1) per QSI005 4.3-Alum +pressure was +1 M114209	0.00							
Powdercoat	**Memo** START TIME: 2:15pm OVEN TEMPERATURE: 320°C FINISH TIME: 2:45pm	0.00	=> JW	10/05/27		10RH	~~0~~		
Powder Coating									
230	Wing Walk as per dwg QSI005 4.4 Batch M114432	0.00							
HandFinish	**Memo**	0.00				10		10-5-28.	
Hand Finishing									
240	QC3- Inspect Part Finish	0.00	8 10/06/09						
QC	**Memo**	0.00				+10 RH			
Quality Control									

Dart Aerospace Ltd

W/O:		WORK ORDER CHANGES					
DATE	STEP	PROCEDURE CHANGE	By	Date	Qty	Approval Chief Eng / Prod Mgr	Approval QC Inspector

Part No: _____ **PAR #:** _____ **Fault Category:** _____ **NCR:** Yes No **DQA:** _____ **Date:** _____

Resolution: _____ **Disposition:** _____ **QA: N/C Closed:** _____ **Date:** _____

NCR:		WORK ORDER NON-CONFORMANCE (NCR)						
DATE	STEP	Description of NC Section A	Corrective Action Section B			Verification Section C	Approval Chief Eng	Approval QC Inspector
			Initial Chief Eng	Action Description Chief Eng	Sign & Date			

NOTE: Date & initial all entries

H:\fFORMS\Quality Assurance\approved QA\NCRWO RevE

Work Order ID 58674

May 14, 2010 7:12:33 AM

Item ID: D350-591-312 **Accept** **Setup Start**

Revision ID: **Stop**

Item Name: Heli-Access-Step, Long RH

Start Date: 5/14/10 **Start Qty:** 10.00 **Cust Item ID:**

Required Date: 5/21/10 **Req'd Qty:** 10.00 **Customer:**

Reference:

Run Start

Approvals: **Process Plan:** _____ **Date:** _____ **Tooling:** _____ **Date:** _____

Stop

QC: _____ **Date:** _____ **SPC (Y/N):** _____ **Date:** _____

Sequence ID/ Work Center ID	Operation Description	Set Up/ Run Hours	Draw Number	Draw Rev.	Plan Code	Accept Qty	Reject Qty	Reject Number	Insp. Stamp
250	Pick Kit	0.00							
Packaging						10	6	1	SJ
	Memo	0.00							
Packaging									
260	QC4- 100% Inspect kits for completeness	0.00							
QC									
	Memo	0.00							
Quality Control									
270		0.00							
Packaging	Packaging								
	Memo	0.00							
Packaging	Identify and pack for shipping as per PPPD350-591-312 Location: NW B								

Dart Aerospace Ltd

W/O:		WORK ORDER CHANGES					
DATE	STEP	PROCEDURE CHANGE	By	Date	Qty	Approval Chief Eng / Prod Mgr	Approval QC Inspector

Part No: _____ **PAR #:** _____ **Fault Category:** _____ **NCR:** Yes No **DQA:** _____ **Date:** _____

Resolution: _____ **Disposition:** _____ **QA: N/C Closed:** _____ **Date:** _____

NCR:		WORK ORDER NON-CONFORMANCE (NCR)						
DATE	STEP	Description of NC Section A	Corrective Action Section B			Verification Section C	Approval Chief Eng	Approval QC Inspector
			Initial Chief Eng	Action Description Chief Eng	Sign & Date			

NOTE: Date & initial all entries

H:\fFORMS\Quality Assurance\approved QA\NCRWO RevE

Work Order ID 58674

May 14, 2010 7:12:33 AM

Item ID: D350-591-312 **Accept** **Setup Start**

Revision ID: **Stop**

Item Name: Heli-Access-Step, Long RH

Start Date: 5/14/10 **Start Qty:** 10.00 **Cust Item ID:**

Required Date: 5/21/10 **Req'd Qty:** 10.00 **Customer:**

Reference:

Run Start

Approvals: **Process Plan:** _____ **Date:** _____ **Tooling:** _____ **Date:** _____

Stop

QC: _____ **Date:** _____ **SPC (Y/N):** _____ **Date:** _____

Sequence ID/ Work Center ID	Operation Description	Set Up/ Run Hours	Draw Number	Draw Rev.	Plan Code	Accept Qty	Reject Qty	Reject Number	Insp. Stamp
280	QC21- Final Inspection - Work Order Release	0.00					10/06/10		
QC Quality Control	**Memo**	0.00							

U 10-06-10

Dart Aerospace Ltd

W/O:		WORK ORDER CHANGES					
DATE	STEP	PROCEDURE CHANGE	By	Date	Qty	Approval Chief Eng / Prod Mgr	Approval QC Inspector

Part No: _____ **PAR #:** _____ **Fault Category:** _____ **NCR:** Yes No **DQA:** _____ **Date:** _____

Resolution: _____ **Disposition:** _____ **QA: N/C Closed:** _____ **Date:** _____

NCR:		WORK ORDER NON-CONFORMANCE (NCR)						
DATE	STEP	Description of NC Section A	Corrective Action Section B			Verification Section C	Approval Chief Eng	Approval QC Inspector
			Initial Chief Eng	Action Description Chief Eng	Sign & Date			

NOTE: Date & initial all entries

H:\fFORMS\Quality Assurance\approved QA\NCRWO RevE

Picklist Print

May 14, 2010 7:12:31 AM

6

Work Order ID: 58674

Parent Item: D350-591-312

Parent Item Name: Heli-Access-Step, Long RH

Start Date: 5/14/10 **Required Date:** 5/21/10

Start Qty: 10.00 **Required Qty:** 10.00

Comments: IPP Rev:A□04.03.22□New issue □KJ/RF□
IPP Rev:B 07-06-09 Added D3572-1 JLM
IPP Rev:C 08-04-02 ECN1163 DD verified by:EC
IPP Rev:D 08-04-08 ECN1164 DD verified by:eC IPP Rev:D

D3067-1 End Plate	Manufactured	No		110	Each	117.0000	1	10·05·18
			Location	**Loc Qty**	**Loc Code**			
			WA	117				
			57926	117				10
D3272-1 Step	Manufactured	No		110	Each	0.0000	1	10·05·18 B58675
D3065-041 Step Leg Assembly Hi	Manufactured	No		180	Each	34.0000	1	10·05·26
			Location	**Loc Qty**	**Loc Code**			
			WA	34				
			56827	18				8
			58160	16				2
D3066-1 Spacer	Manufactured	No		180	Each	97.0000	2	10·05·26
			Location	**Loc Qty**	**Loc Code**			
			WA	97				
			57920	97				20
D3067-1 End Plate	Manufactured	No		180	Each	117.0000	1	10·05·27
			Location	**Loc Qty**	**Loc Code**			
			WA	117				
			57926	117				10

Dart Aerospace Ltd

W/O:		WORK ORDER CHANGES					
DATE	STEP	PROCEDURE CHANGE	By	Date	Qty	Approval Chief Eng / Prod Mgr	Approval QC Inspector

Part No: _____ **PAR #:** _____ **Fault Category:** _____ **NCR:** Yes No **DQA:** _____ **Date:** _____

Resolution: _____ **Disposition:** _____ **QA: N/C Closed:** _____ **Date:** _____

NCR:		WORK ORDER NON-CONFORMANCE (NCR)						
DATE	STEP	Description of NC Section A	Corrective Action Section B			Verification Section C	Approval Chief Eng	Approval QC Inspector
			Initial Chief Eng	Action Description Chief Eng	Sign & Date			

NOTE: Date & initial all entries

H:\fFORMS\Quality Assurance\approved QA\NCRWO RevE

Picklist Print

May 14, 2010 7:12:31 AM

Work Order ID: 58674

Parent Item: D350-591-312

Parent Item Name: Heli-Access-Step, Long RH

Start Date: 5/14/10 **Required Date:** 5/21/10

Start Qty: 10.00 **Required Qty:** 10.00

Comments: IPP Rev:A□04.03.22□New issue □KJ/RF□
IPP Rev:B 07-06-09 Added D3572-1 JLM
IPP Rev:C 08-04-02 ECN1163 DD verified by:EC
IPP Rev:D 08-04-08 ECN1164 DD verified by:eC IPP Rev:D

D3219-1	Manufactured	No	180	Each	97.0000	2	10.05.18
Plate							

Location	Loc Qty	Loc Code	
WA	97		
56826	1		1
58550	96		19

MS20600-AD4W4	Purchased	No	180	Each	543.0000	16	10.05.18
Rivets							

Location	Loc Qty	Loc Code	
ST321	543		
113368	62		
114181	481		160

AN3-35A	Purchased	No	250	Each	91.0000	2	10.5.71
6 +10 Bolt							

Location	Loc Qty	Loc Code	
ST353	91		
112314	21		
114382	50		
114523	20		20

Dart Aerospace Ltd

W/O:		WORK ORDER CHANGES					
DATE	STEP	PROCEDURE CHANGE	By	Date	Qty	Approval Chief Eng / Prod Mgr	Approval QC Inspector

Part No: _____ PAR #: _____ Fault Category: _____ NCR: Yes No DQA: _____ Date: _____

Resolution: _____ Disposition: _____ QA: N/C Closed: _____ Date: _____

NCR:		WORK ORDER NON-CONFORMANCE (NCR)						
DATE	STEP	Description of NC Section A	Corrective Action Section B			Verification Section C	Approval Chief Eng	Approval QC Inspector
			Initial Chief Eng	Action Description Chief Eng	Sign & Date			

NOTE: Date & initial all entries

H:\fFORMS\Quality Assurance\approved QA\NCRWO RevE

Picklist Print

May 14, 2010 7:12:32 AM

Work Order ID: 58674

Parent Item: D350-591-312

Parent Item Name: Heli-Access-Step, Long RH

Start Date: 5/14/10 **Required Date:** 5/21/10

Start Qty: 10.00 **Required Qty:** 10.00

Comments: IPP Rev:A□04.03.22□New issue □KJ/RF□
IPP Rev:B 07-06-09 Added D3572-1 JLM
IPP Rev:C 08-04-02 ECN1163 DD verified by:EC
IPP Rev:D 08-04-08 ECN1164 DD verified by:eC IPP Rev:D

AN4-13A Bolt	Purchased	No	250	Each	224.0000	8	10-6-1	

Location	Loc Qty	Loc Code
ST351	211	
114523	211	80
ST357	13	
114181	6	
4828	7	

AN5-36A Bolt	Purchased	No	250	Each	107.0000	2	10-6-1	

Location	Loc Qty	Loc Code
ST341	107	
114292	107	20

AN960JD10 NAS1149D0363J Washer	Purchased	No	250	Each	0.0000	4	M114292 10-6-1	
AN960JD416 NAS1149D0463J Washer	Purchased	No	250	Each	0.0000	16	M114576 10-6-1	
AN960JD516 NAS1149D0563J Washer	Purchased	No	250	Each	0.0000	4	M113706 10-6-1	

Dart Aerospace Ltd

W/O:		WORK ORDER CHANGES					
DATE	STEP	PROCEDURE CHANGE	By	Date	Qty	Approval Chief Eng / Prod Mgr	Approval QC Inspector

Part No: _____ **PAR #:** _____ **Fault Category:** _____ **NCR:** Yes No **DQA:** _____ **Date:** _____

Resolution: _____ **Disposition:** _____ **QA: N/C Closed:** _____ **Date:** _____

NCR:		WORK ORDER NON-CONFORMANCE (NCR)						
DATE	STEP	Description of NC Section A	Corrective Action Section B			Verification Section C	Approval Chief Eng	Approval QC Inspector
			Initial Chief Eng	Action Description Chief Eng	Sign & Date			

NOTE: Date & initial all entries

H:\fFORMS\Quality Assurance\approved QA\NCRWO RevE

Picklist Print

May 14, 2010 7:12:32 AM

Work Order ID: 58674

Parent Item: D350-591-312

Parent Item Name: Heli-Access-Step, Long RH

Start Date: 5/14/10 **Required Date:** 5/21/10

Start Qty: 10.00 **Required Qty:** 10.00

Comments: IPP Rev:A□04.03.22□New issue □KJ/RF□
IPP Rev:B 07-06-09 Added D3572-1 JLM
IPP Rev:C 08-04-02 ECN1163 DD verified by:EC
IPP Rev:D 08-04-08 ECN1164 DD verified by:eC IPP Rev:D

D2230-3	Manufactured	No	250	Each	115.0000	4	
Lug							

Location	Loc Qty	Loc Code
ST176	4	
51566	4	
ST476	111	
56855	11	
57827	100	

D2618	Manufactured	No	250	Each	93.0000	2	
Bushing							

Location	Loc Qty	Loc Code
ST020	93	
56892	1	
57829	92	

D2856-400	Manufactured	No	250	f	281.9720	0.6	
Abraison Strip							

Location	Loc Qty	Loc Code
ST403	281.972	
50593	73.6768	
56626	208.2952	

D3235-1	Manufactured	No	250	Each	23.0000	2	
Mounting Lug							

Location	Loc Qty	Loc Code
ST471	23	
57921	23	

Dart Aerospace Ltd

W/O:		WORK ORDER CHANGES					
DATE	STEP	PROCEDURE CHANGE	By	Date	Qty	Approval Chief Eng / Prod Mgr	Approval QC Inspector

Part No: _____ **PAR #:** _____ **Fault Category:** _____ **NCR:** Yes No **DQA:** _____ **Date:** _____

Resolution: _____ **Disposition:** _____ **QA: N/C Closed:** _____ **Date:** _____

NCR:		WORK ORDER NON-CONFORMANCE (NCR)						
DATE	STEP	Description of NC Section A	Corrective Action Section B			Verification Section C	Approval Chief Eng	Approval QC Inspector
			Initial Chief Eng	Action Description Chief Eng	Sign & Date			

NOTE: Date & initial all entries

Picklist Print

May 14, 2010 7:12:32 AM

Work Order ID: 58674

Parent Item: D350-591-312

Parent Item Name: Heli-Access-Step, Long RH

Start Date: 5/14/10 **Required Date:** 5/21/10

Start Qty: 10.00 **Required Qty:** 10.00

Comments: IPP Rev:A□04.03.22□New issue □KJ/RF□
IPP Rev:B 07-06-09 Added D3572-1 JLM
IPP Rev:C 08-04-02 ECN1163 DD verified by:EC
IPP Rev:D 08-04-08 ECN1164 DD verified by:eC IPP Rev:D

D3278-041	Manufactured	No	250	Each	40.0000	1	10-6-1
Support Assembly							

Location	Loc Qty	Loc Code
ST471	40	
55318	3	
57952	37	10

MS21042L3	Purchased	No	250	Each	1,544.000	2	10-6-1
Nut							

Location	Loc Qty	Loc Code
ST300	1544	
113537	20	
113644	524	20
114523	1000	

MS21042L4	Purchased	No	250	Each	1,849.000	8	10-6-1 (102)
Nut							

Location	Loc Qty	Loc Code
ST139	2	
111827	2	
ST300	1847	
113422	80	
114523	1759	82
9063	8	

Dart Aerospace Ltd

W/O:		WORK ORDER CHANGES					
DATE	STEP	PROCEDURE CHANGE	By	Date	Qty	Approval Chief Eng / Prod Mgr	Approval QC Inspector

Part No: _____ PAR #: _____ Fault Category: _____ NCR: Yes No DQA: _____ Date: _____

Resolution: _____ Disposition: _____ QA: N/C Closed: _____ Date: _____

NCR:		WORK ORDER NON-CONFORMANCE (NCR)						
DATE	STEP	Description of NC Section A	Corrective Action Section B			Verification Section C	Approval Chief Eng	Approval QC Inspector
			Initial Chief Eng	Action Description Chief Eng	Sign & Date			

NOTE: Date & initial all entries

H:\fFORMS\Quality Assurance\approved QA\NCRWO RevE

Picklist Print

May 14, 2010 7:12:32 AM

Work Order ID: 58674

Parent Item: D350-591-312

Parent Item Name: Heli-Access-Step, Long RH

Start Date: 5/14/10 **Required Date:** 5/21/10

Start Qty: 10.00 **Required Qty:** 10.00

Comments: IPP Rev:A□04.03.22□New issue □KJ/RF□
IPP Rev:B 07-06-09 Added D3572-1 JLM
IPP Rev:C 08-04-02 ECN1163 DD verified by:EC
IPP Rev:D 08-04-08 ECN1164 DD verified by:eC IPP Rev:D

MS21042L5	Purchased	No	250	Each	579.0000	2	

6 HO Nut

10-6-1 SP

Location	Loc Qty	Loc Code	
ST300	579		
113523	26		
113537	3		
114108	50		
114437	100		20
114449	400		

Dart Aerospace Ltd

W/O:		WORK ORDER CHANGES					
DATE	STEP	PROCEDURE CHANGE	By	Date	Qty	Approval Chief Eng / Prod Mgr	Approval QC Inspector

Part No: _____ PAR #: _____ Fault Category: _____ NCR: Yes No DQA: _____ Date: _____

Resolution: _____ Disposition: _____ QA: N/C Closed: _____ Date: _____

NCR:		WORK ORDER NON-CONFORMANCE (NCR)						
DATE	STEP	Description of NC Section A	Corrective Action Section B			Verification Section C	Approval Chief Eng	Approval QC Inspector
			Initial Chief Eng	Action Description Chief Eng	Sign & Date			

NOTE: Date & initial all entries

H:\FORMS\Quality Assurance\approved QA\NCRWO RevE

DART

DESIGN	DRAWN BY	DART AEROSPACE LTD HAWKESBURY, ONTARIO, CANADA	
CHECKED	APPROVED	DRAWING NO. D3272	REV. B SHEET 1 OF 3
DATE 07.05.18		TITLE STEP ASSEMBLY, HI LONG	SCALE NTS

A	04.03.01	NEW ISSUE
B	07.05.18	D3272-1 WAS D2622-120

RELEASED
07 06 04

QTY -041	QTY -042	PART NUMBER	DESCRIPTION
X		**D3272-041**	**STEP ASSEMBLY, HIGH LONG (LH)**
	X	**D3272-042**	**STEP ASSEMBLY, HIGH LONG (RH)**
1	1	D3065-041	LEG ASSEMBLY
2	2	D3066-1	SPACER
2	2	D3067-1	END PLATE
2	2	D3219-1	SUPPORT
1	1	D3272-1	STEP
16	16	MS20600AD4W4	RIVET

B

GENERAL NOTES:

1) D3272-041 SHOWN. FOR D3272-042, INSTALL D3219-1 SUPPORT OPPOSITE SIDE
2) WELD PER DART QSI 004
3) FINISH: CHEMICAL CONVERSION COAT PER DART QSI 005.4.1
   POWDER COAT ASSEMBLY WHITE (4.3.5.1) PER DART QSI 005 4.3
   BLACK ANTI-SKID PAINT PER DART QSI 005 4.4
4) TOLERANCES ARE PER DART QSI 018 UNLESS OTHERWISE NOTED.
5) ALL DIMENSIONS ARE IN INCHES UNLESS OTHERWISE NOTED.
6) BREAK ALL SHARP EDGES 0.005 TO 0.010 MAX.

C 21015125
W10: 58674

Copyright © 2004 by DART AEROSPACE LTD
THIS DOCUMENT IS PRIVATE AND CONFIDENTIAL AND IS SUPPLIED ON THE EXPRESS CONDITION THAT IT IS NOT TO BE USED FOR ANY PURPOSE OR COPIED OR COMMUNICATED TO ANY OTHER PERSON WITHOUT WRITTEN PERMISSION FROM DART AEROSPACE LTD.

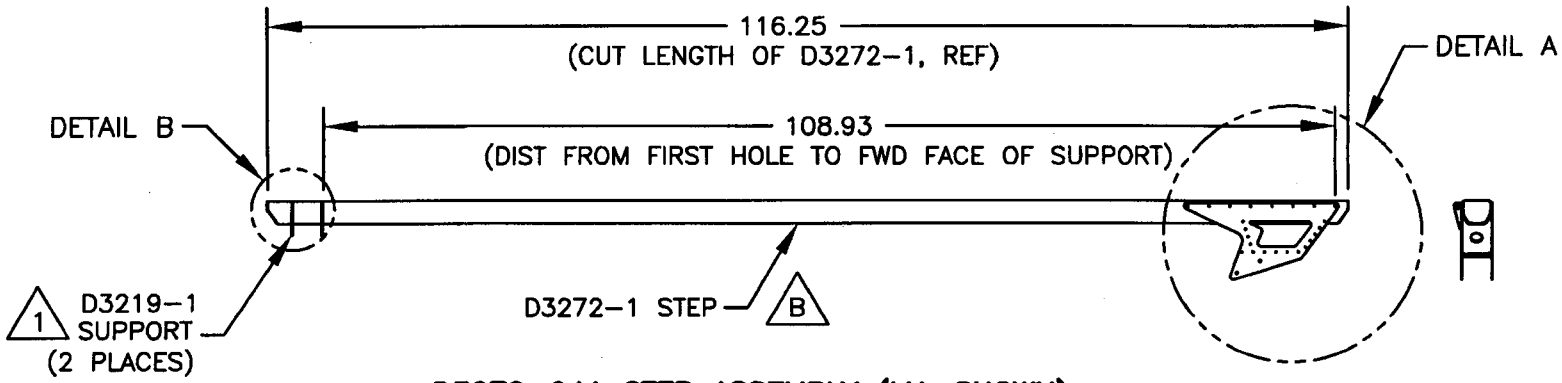

D3272-041 STEP ASSEMBLY (LH, SHOWN)

D3272-042 STEP ASSEMBLY (RH, OPPOSITE)

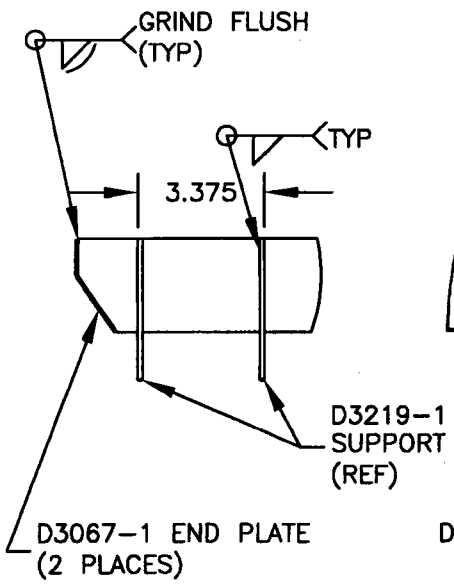

DETAIL B
(SCALE 1:5)

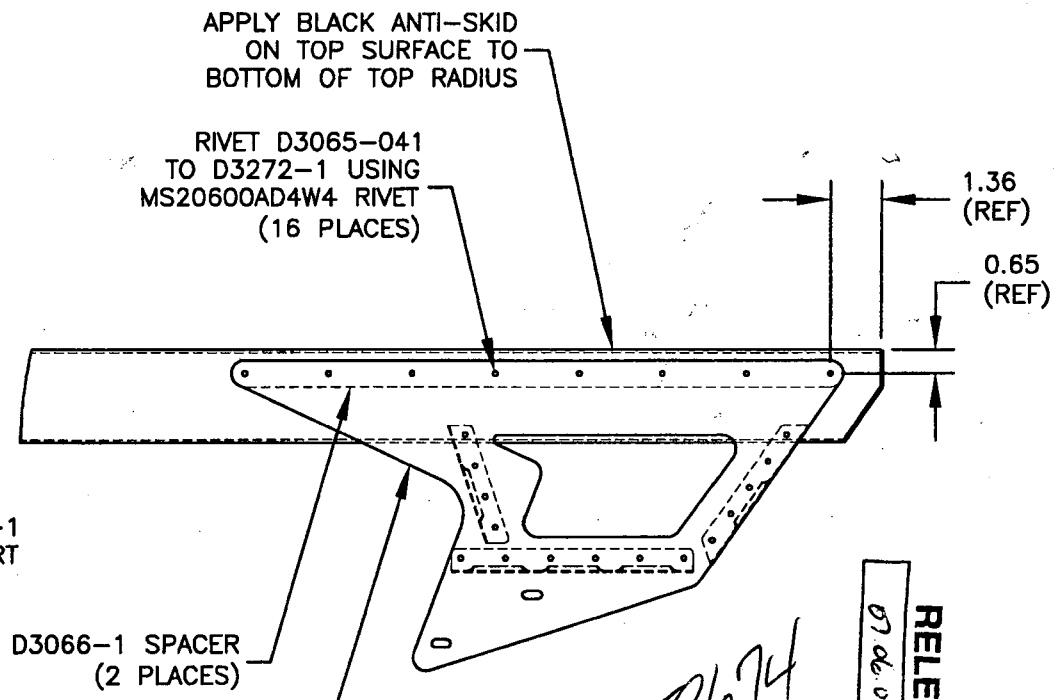

DETAIL A
(SCALE 1:5)

RELEASED
07.06.04

58674

DESIGN	DRAWN BY	DART AEROSPACE LTD HAWKESBURY, ONTARIO, CANADA
CHECKED	APPROVED	DRAWING NO. D3272 — REV. B
DATE 07.05.18		TITLE STEP ASSEMBLY, HI LONG — SHEET 2 OF 3 — SCALE 1:20

Copyright © 2004 by DART AEROSPACE LTD

THIS DOCUMENT IS PRIVATE AND CONFIDENTIAL AND IS SUPPLIED ON THE EXPRESS CONDITION THAT IT IS NOT TO BE USED FOR ANY PURPOSE OR COPIED OR COMMUNICATED TO ANY OTHER PERSON WITHOUT WRITTEN PERMISSION FROM DART AEROSPACE LTD.

DESIGN	DRAWN BY	DART AEROSPACE LTD HAWKESBURY, ONTARIO, CANADA	
CHECKED	APPROVED	DRAWING NO. D3272	REV. B SHEET 3 OF 3
DATE 07.05.18		TITLE STEP ASSEMBLY, HI LONG	SCALE 1:20

RELEASED
07.06.04

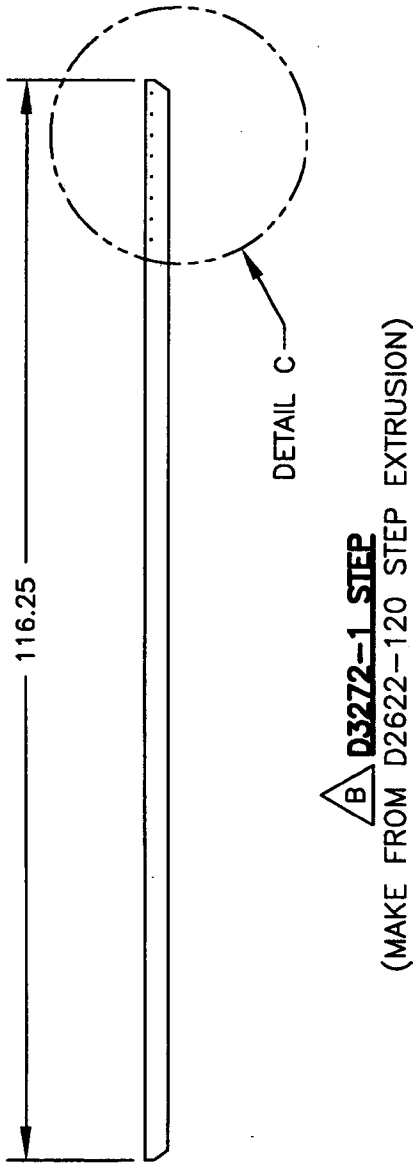

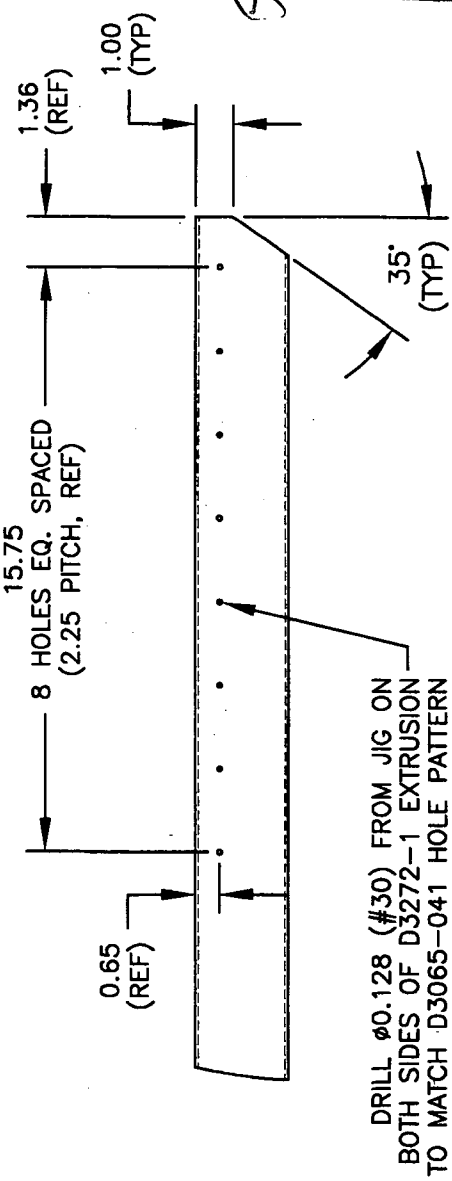

DETAIL C
(SCALE 1:5)

Copyright © 2004 by DART AEROSPACE LTD

THIS DOCUMENT IS PRIVATE AND CONFIDENTIAL AND IS SUPPLIED ON THE EXPRESS CONDITION THAT IT IS NOT TO BE USED FOR ANY PURPOSE OR COPIED OR COMMUNICATED TO ANY OTHER PERSON WITHOUT WRITTEN PERMISSION FROM DART AEROSPACE LTD.

Qty -211	Qty -212	Qty -213	Qty -214	Qty -215	Qty -216	Qty -311	Qty -312	Part Number	Description
X								D350-591-211	***Heli-Access-Step***™, Long Step – High Skid, LH
	X							D350-591-212	***Heli-Access-Step***™, Long Step – High Skid, RH
		X						D350-591-213	***Heli-Access-Step***™, Short Step – High Skid, LH
			X					D350-591-214	***Heli-Access-Step***™, Short Step – High Skid, RH
				X				D350-591-215	***Heli-Access-Step***™, Short Step – Low Skid, LH
					X			D350-591-216	***Heli-Access-Step***™, Short Step – Low Skid, RH
						X		D350-591-311	***Heli-Access-Step***™, Long Step – High Skid, LH
							X	D350-591-312	***Heli-Access-Step***™, Long Step – High Skid, RH
1								D3070-041	STEP ASSEMBLY (HIGH-LONG, LH)
	1							D3070-042	STEP ASSEMBLY (HIGH-LONG, RH)
		1						D3078-041	STEP ASSEMBLY (HIGH-SHORT, LH)
			1					D3078-042	STEP ASSEMBLY (HIGH-SHORT, RH)
				1				D3168-041	STEP ASSEMBLY (LOW-SHORT, LH)
					1			D3168-042	STEP ASSEMBLY (LOW-SHORT, RH)
						1		D3272-041	STEP ASSEMBLY (HIGH-LONG, LH)
							1	D3272-042	STEP ASSEMBLY (HIGH-LONG, RH)
4	4							D2182B035	RUBBER CUSHION
		2	2	2	2			D2230-1	MOUNTING LUG
		2	2	2	2	4	4	D2230-3	MOUNTING LUG
8	8							D2274	RADIUS BLOCK
						2	2	D2618	BUSHING
4	4	4	4	4	4			D2732-030	CUSHION
2	2	1	1	1	1	2	2	D2856-400-720	ABRASION STRIP
2	2							D3064-1	CLAMP
1	1							D3079-041	SUPPORT ASSEMBLY
4	4							D3080-1	CLAMP
						2	2	D3235-1	MOUNTING LUG
						1	1	D3278-041	SUPPORT ASSEMBLY
2	2	2	2	2	2	2	2	AN3-35A	BOLT
10	10	2	2	2	2			AN4-11A	BOLT
		4	4	4	4	8	8	AN4-13A	BOLT
						2	2	AN5-36A	BOLT
4	4	4	4	4	4	4	4	AN960JD10	WASHER
20	20	12	12	12	12	16	16	AN960JD416	WASHER
						4	4	AN960JD516	WASHER
2	2	2	2	2	2	2	2	MS21042L3	NUT
10	10	6	6	6	6	8	8	MS21042L4	NUT
						2	2	MS21042L5	NUT
						1	1	*DSI 9410-011	STEP MODIFICATION KIT

*DSI 9410-011 Step Modification Kits are provided with all D350-591-311 and D350-591-312 Steps. This kit is provided as an option for the installer and is therefore **NOT REQUIRED** to complete the installation of the D350-591-311 or D350-591-312 Steps. Refer to Figure 21 for installation of the DSI 9410-011 Kit.

• COPYRIGHT © 1993 BY DART AEROSPACE LTD •
THIS DOCUMENT IS PRIVATE AND CONFIDENTIAL AND IS SUPPLIED ON THE EXPRESS CONDITION THAT IT IS NOT TO BE USED FOR ANY PURPOSE OR COPIED OR COMMUNICATED TO ANY OTHER PERSON WITHOUT WRITTEN PERMISSION FROM DART AEROSPACE LTD.

Dart Aerospace Ltd

W/O:		WORK ORDER CHANGES					
DATE	STEP	PROCEDURE CHANGE	By	Date	Qty	Approval Chief Eng / Prod Mgr	Approval QC Inspector

Part No: _____ PAR #: _____ Fault Category: _____ NCR: Yes No DQA: _____ Date: _____

Resolution: _____ Disposition: _____ QA: N/C Closed: _____ Date: _____

NCR:		WORK ORDER NON-CONFORMANCE (NCR)						
DATE	STEP	Description of NC Section A	Corrective Action Section B			Verification Section C	Approval Chief Eng	Approval QC Inspector
			Initial Chief Eng	Action Description Chief Eng	Sign & Date			

NOTE: Date & initial all entries